Technical sheet :

M 50-4

MANITOU
HANDLING YOUR WORLD

	Technical characteristics		Metric
1.1	Manufacturer		Manitou
1.2	Model Name		M 50-4
1.3	Power source		Diesel
1.4	Operator type		Seated
1.5	Max. capacity	Q	5000 kg
1.6	Load center of gravity	c	600 mm
1.8	Load distance, centre of drive axle to fork	x	773 mm
1.9	Wheelbase	y	2120 mm
	Weight		
	Standard mast reference of the machine		FVD 37
2.1	Service weight		8325 kg
2.2	Weight on front axle (laden) / rear axle (laden)		11520 kg / 1805 kg
2.3	Weight on front axle (Unladen) / rear axle (Unladen)		3285 kg / 5040 kg
	Wheels		
3.1	Tires type		Pneumatic
3.2	Dimensions of front wheels		18-22,5 MPT06
3.3	Dimensions of rear wheels		340/80 R18 XMCL
3.5	Number of front wheels / rear wheels		2 / 2
3.5.2	Number of drive wheels		4
3.6	Front wheel gauge	b10	1620 mm
3.7	Rear wheel gauge	b11	1740 mm
	Dimensions		
4.7	Height of overhead guard (cabin)	h6	1500 mm
4.8	Seat height/stand height	h7	1400 mm
4.19	Overall length	l1	4948 mm
4.20	Length to face of forks	l2	3748 mm
4.21	Overall width	b1	2080 mm
4.22	Forks section x width x length	s / e / l	60 mm x 150 mm / 1200 mm
4.23	Fork carriage ISO 2328 (class/form) A/B		4A
4.24	Fork carriage width	b3	1670 mm
4.31	Ground clearance below mast	m1	295 mm
4.32	Ground clearance at centre of wheelbase	m2	380 mm
4.34	Aisle width for 800 x 1200 pallet lengthways	Ast	6812 mm
4.35	Turning radius	Wa	4640 mm
	Performances		
5.1	Travel speed (laden / unladen)		10 km/h / 24 km/h
5.2	Lifting speed (laden / unladen)		0.40 m/s / 0.40 m/s
5.3	Lowering speed (laden / unladen)		0.40 m/s / 0.30 m/s
5.5	Drawbar pull (Laden)		1020 daN
5.10	Service brake		Hydraulic
	Transmission type		Torque converter
	Engine		
7.1	Engine brand / model / norm		Perkins / 854F-E34T WF / Stage IIIB
7.2	Engine power (Hp / kW)		75 Hp/55 kW
7.3	Rated speed		2200 rpm
7.4	Number of cylinders		4
	Miscellaneous		
8.2	Working hydraulic pressure for attachments		230 bar
8.3	Oil flow rate for attachments		97 l/min
8.4	Sound level at the driver's ear according to DIN 12 053		76 dB

M 50-4 - Dimensional drawing

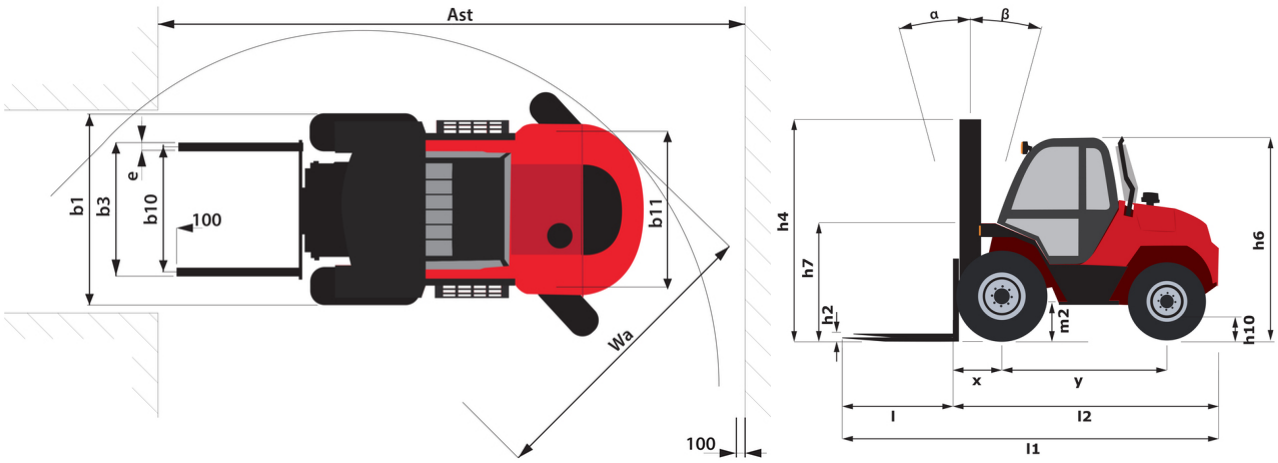

Characteristics of masts and residual capacities

Full Visibility Duplex (FVD)		FVD 30	FVD 33	FVD 35	FVD 37	FVD 40	FVD 45	FVD 50
α - Mast/fork carriage tilt, forward	°	15	15	15	15	15	15	15
β - Mast/fork carriage tilt, backward	°	15	15	15	15	15	15	15
h1 - Mast lowered height	mm	2560	2710	2810	2910	3060	3305	3560
h4 - Mast extended height	mm	4115	4415	4615	4815	5115	5615	6115
Residual capacity at max height	kg	5000	5000	5000	5000	5000	5000	4000
Residual capacity with integrated side shift at max heigth	kg	4700	4700	4700	4700	4700	4700	3600
Height at max capacity	mm	2500	2500	2500	2500	2500	2500	2500

Free Lift Triplex (FLT)		FLT 37	FLT 40	FLT 43	FLT 45	FLT 47	FLT 50	FLT 55	FLT 60
α - Mast/fork carriage tilt, forward	°	15	15	15	15	15	15	15	15
β - Mast/fork carriage tilt, backward	°	15	15	15	15	15	15	15	15
h1 - Mast lowered height	mm	2310	2410	2510	2585	2645	2760	2910	3085
h2 - Mast free lift	mm	1265	1365	1465	1540	1600	1715	1865	2040
h4 - Mast extended height	mm	4805	5105	5405	5605	5806	6105	6605	7105
Residual capacity at max height	kg	5000	5000	4700	4600	4300	4450	4600	4450
Residual capacity with integrated side shift at max heigth	kg	4500	4500	4000	3600	3500	2000	1800	
Residual capacity with hooked-on side shift at max heigth	kg								900
Height at max capacity	mm	2500	2500	2500	2500	2500	2500	2500	4000
Height at max capacity with hooked-on sideshift	mm								4000

Head Office
B.P. 249 - 430 rue de l'Aubinière
44150 Ancenis Cedex - France
Tel: +33 (0)2 40 09 10 11 - Fax: +33 (0)2 40 09 10 97
www.manitou.com

This publication provides a description of the configuration versions and options for Manitou products, which may differ for equipment. The equipment presented in this brochure may be part of a series, as an option, or it may not be available, depending on the versions. Manitou reserves the right, at any time and without notice, to amend the specifications described and represented. The specifications provided do not bind the manufacturer. For more details, please contact your Manitou agent. This is not a contractually binding document. The presentation of the products is not contractually binding. List of specifications non-exhaustive. The logos as well as the visual identity of the company are owned by Manitou and cannot be used without authorisation. All rights reserved. The photos and diagrams contained in this brochure are only provided for consultation and information purposes.
MANITOU BF SA - Limited company with board of directors - Share capital: 39,668,399 euros - 857 802 508 RCS Nantes